Owner's Manual

Double-Drawer Built-In Refrigerator

ZIDI240
ZIDS240

Monogram®

Introduction

Your new Monogram double-drawer refrigerator makes an eloquent statement of style, convenience and kitchen planning flexibility. Whether you chose it for its purity of design or the assiduous attention to detail, you will find that your Monogram double-drawer refrigerator's superior blend of form and function will delight you for years to come.

The information on the following pages will help you operate and maintain your double-drawer refrigerator properly.

If you have any other questions, visit our Website at: **ge.com**

Contents

Built-In Dimensions 13, 14
Care and Cleaning 11, 12
Consumer Services 19
Controls and Features 8–10
Installation 14, 15
Model and Serial Numbers 2
Problem Solver 16–18
Repair Service 3, 19
Safety Instructions 4–7
Warranty . . . . . .Back Cover

Before using your double-drawer refrigerator

Read this manual carefully. It is intended to help you operate and maintain your new double-drawer refrigerator properly.

Keep it handy for answers to your questions.

If you don't understand something or need more help, there is a list of toll-free consumer service numbers included in the back section of this manual.

OR

Visit our Website at: **ge.com**

Write down the model & serial numbers

You will find them on a label on the ceiling inside the double-drawer refrigerator.

Please write these numbers here:

_____
Model Number

_____
Serial Number

Use these numbers in any correspondence or service calls concerning your double-drawer refrigerator.

If you received a damaged appliance

The warranty does not cover damage caused after delivery.

Immediately contact the dealer (or builder) that sold you the double-drawer refrigerator.

Save time & money

Before you request service, check the Problem Solver in the back of this manual.

It lists causes of minor operating problems that you can correct yourself.

Remove packaging

Before using, be sure all packing materials and tape have been removed.

To assure no damage is done to the finish of the product, the safest way to remove the adhesive left from packaging tape on new appliances is an application of household liquid detergent. Apply with a soft cloth and allow to soak. Wipe dry and then apply an appliance polish to thoroughly clean and protect the surface.

If you need service

To obtain service, see the Consumer Services page in the back of this manual.

We are proud of our service and want you to be pleased. If for some reason you are not happy with the service you receive, here are steps to follow for further help.

For customers in the USA:

FIRST, contact the people who serviced your appliance. Explain why you are not pleased. In most cases, this will solve the problem.

NEXT, if you are still not pleased, write all the details—including your phone number—to:

Manager, Customer Relations
GE Appliances
Appliance Park
Louisville, KY 40225

For customers in Canada:

FIRST, contact the people who serviced your appliance. Explain why you are not pleased. In most cases, this will solve the problem.

NEXT, if you are still not pleased, write all the details—including your phone number to:

Manager, Consumer Relations
Camco Inc.
1 Factory Lane, Suite 310
Moncton, N.B. E1C 9M3

After installation is completed

- Promptly inspect your new Monogram double-drawer refrigerator. If it has been damaged, contact the Installer or Dealer immediately.
- This double-drawer refrigerator must be properly leveled to ensure correct drawer alignment and drawer closure. Contact the Installer if the unit is not level.
- The unit should be centered in the opening. The front face of the drawer will be flush with adjacent cabinetry. Contact the installer if clearance is not correct.
- Test the drawer. Carefully open and close the drawer. The drawer should not rub or catch on adjacent cabinetry. Notify the installer if the drawer makes contact with cabinetry.

Please Contact the Installer or Dealer if you experience any of these problems.

Your custom panel (ZIDI240 model only) double-drawer refrigerator is shipped with two toekicks, a stainless steel and a black toekick. For shipping purposes, one of the toekicks will be secured to the back or on the inside of the unit, and the second will be installed on the unit. Keep the unused toekick and other unused or removed parts for possible future use.

READ AND SAVE THESE INSTRUCTIONS

⚠WARNING: When using this appliance, always exercise basic safety precautions, including the following:

- **Double-drawer refrigerators are designed to be built-in only. They cannot be used free-standing.**
- **Use this appliance only for its intended purpose** as described in this Owner's Manual.
- **This double-drawer refrigerator must be properly installed in accordance with the Installation Instructions before it is used.**
- **Do not allow children to climb, stand or hang on the shelves in the double-drawer refrigerator.** They could damage the double-drawer refrigerator and seriously injure themselves.
- **Do not store or use gasoline or other flammable vapors and liquids in the vicinity of this or any other appliance.**
- **Keep fingers out of the "pinch point" areas:** clearances between the drawer and between the drawer and cabinet are necessarily small. Be careful closing the drawer when children are in the area.
- **Unplug your double-drawer refrigerator before cleaning or making repairs.**

NOTE: We strongly recommend that any servicing be performed by a qualified individual.

⚠ *DANGER: RISK OF CHILD ENTRAPMENT*

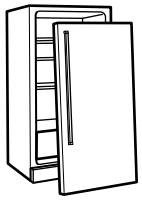

Child entrapment and suffocation are not problems of the past. Junked or abandoned refrigeration products are still dangerous…even if they will sit for "just a few days." If you are getting rid of your old appliance, please follow these instructions to help prevent accidents.

Before You Throw Away Your Old Refrigeration Product:

- Take off the doors.
- Leave the shelves in place so that children may not easily climb inside.

REFRIGERANTS

All refrigeration products contain refrigerants, which under federal law must be removed prior to product disposal.

If you are getting rid of an old refrigeration product, check with the company handling the disposal about what to do.

LIRE ET CONSERVER CES INSTRUCTIONS

⚠AVERTISSEMENT :

Lorsque vous utilisez l'appareil, observez toujours certaines précautions de base, notamment :

- **Les réfrigérateurs à deux tiroirs sont conçus pour être encastrés uniquement. Ils ne peuvent pas être séparés.**
- **N'utilisez l'appareil que pour son usage prévu,** comme décrit dans le présent manuel.
- **Installez le réfrigérateur à deux tiroirs conformément aux directives d'installation avant de l'utiliser.**
- **Ne laissez pas les enfants grimper, s'asseoir, se tenir debout ni se pendre aux clayettes du réfrigérateur à deux tiroirs.** Ils pourraient endommager le réfrigérateur à deux tiroirs et se blesser gravement.
- **N'entreposez et n'utilisez pas d'essence ou autres vapeurs et liquides inflammables à proximité de cet appareil ou de tout autre appareil électroménager.**
- **Éloignez les doigts des parties du réfrigérateur où l'on peut facilement se pincer :** les espaces entre les tiroirs et entre les tiroirs et les placards sont toujours étroits. Soyez prudent lorsque vous fermez les tiroirs de l'appareil en présence des enfants.
- **Débranchez votre réfrigérateur à deux tiroirs avant de le nettoyer et de le réparer.**

REMARQUE : Nous vous recommandons vivement de confier toute réparation à un technicien qualifié.

⚠ *DANGER : RISQUES POUR LES ENFANTS*

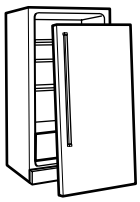

Les enfants pris au piège ou morts d'asphyxie sont toujours d'actualité. Les appareils de réfrigération abandonés sont toujours aussi dangereux, même si on n'attend que "quelque jours" pour s'en débarasser. Si vous ne gardez pas votre ancien appareil, veuillez suivre les directives ci-dessous afin de prévenir les accidents.

Avant de vous débarasser de votre vieux appareil de réfrigération :

- Démontez les portes.
- Laissez les clayettes en place afin d'empêcher les enfants de grimper à l'intérieur.

RÉFRIGÉRANTS

Tous les appareils de réfrigération contiennent des refrigerants qui, conformément aux lois fédérales, doivent être enlevés avant toute élimination de l'appareil.

Si vous vous débarrassez de vieux appareils de réfrigération, vérifiez, auprès de la société qui s'occupe de leur élimination, ce que vous devez faire.

HOW TO CONNECT ELECTRICITY

Do not, under any circumstances, cut or remove the third (ground) prong from the power cord. For personal safety, this appliance must be properly grounded.

The power cord of this appliance is equipped with a 3-prong (grounding) plug which mates with a standard 3-prong (grounding) wall outlet to minimize the possibility of electric shock hazard from this appliance.

Have the wall outlet and circuit checked by a qualified electrician to make sure the outlet is properly grounded.

Where a standard 2-prong wall outlet is encountered, it is your personal responsibility and obligation to have it replaced with a properly grounded 3-prong wall outlet.

Use of a GFI (Ground Fault Interrupter) is not recommended for the double-drawer refrigerator.

The appliance should always be plugged into its own individual electrical outlet which has a voltage rating that matches the rating plate. This provides the best performance and also prevents overloading house wiring circuits which could cause a fire hazard from overheated wires.

DO NOT USE AN ADAPTER PLUG TO CONNECT THE DOUBLE-DRAWER REFRIGERATOR TO A 2-PRONG OUTLET.

DO NOT USE AN EXTENSION CORD WITH THIS APPLIANCE.

Never unplug an appliance by pulling on the power cord. Always grip the plug firmly and pull straight out from the outlet.

Repair or replace immediately all power cords that have become frayed or otherwise damaged. Do not use a cord that shows cracks or abrasion damage along its length or at either end.

When moving the appliance, be careful not to roll over or damage the power cord.

SAVE THESE INSTRUCTIONS

RACCORDEMENT ÉLECTRIQUE

Ne coupez ni retirez en aucun cas la troisième broche (mise à la terre) de la fiche du cordon d'alimentation. Pour votre sécurité, cet appareil doit être correctement mis à la terre.

Le cordon d'alimentation de cet appareil est muni d'une fiche à 3 broches (mise à la terre) qui se branche dans une prise mural ordinaire à 3 alvéoles (mise à la terre) pour réduire au minimum les risques du chocs électriques.

Faites examiner la prise de courant et le circuit par un électricien qualifié pour vous assurer que la prise est correctement mise à la terre.

Si la prise murale est du type standard à 2 alvéoles, il vous incombe de la faire remplacer par une prise à 3 alvéoles correctement mise à la terre.

L'utilisation d'un disjoncteur de fuite à la terre est recommandée pour le réfrigérateur à deux tiroirs.

L'appareil doit toujours être branché dans sa propre prise de courant, dont la tension nominale est identique à celle indiquée sur la plaque signalétique. Cette précaution est recommandée pour garantir un rendement optimum et éviter une surcharge des circuits électriques de la résidence, ce qui pourrait créer un risque d'incendie par surschauffe des fils.

N'UTILISEZ JAMAIS UNE PRISE À ADAPTATEUR POUR LE RÉFRIGÉRATEUR À DEUX TIROIRS À UNE PRISE BIPOLAIRE.

N'UTILISEZ JAMAIS DE RALLONGE AVEC CET APPAREIL.

Ne débranchez jamais l'appareil en tirant le cordon d'alimentation. Saisissez fermement la fiche du cordon et tirez droit pour la retirer de la prise.

Réparez ou remplacez immédiatement tout cordon effiloché ou endommagé. N'utilisez pas un cordon fendillé ou présentant des signes d'usure.

Lorsque vous déplacez l'appareil, faites attention de ne pas la faire rouler sur le cordon d'alimentation afin de ne pas l'endommager.

CONSERVEZ CES DIRECTIVES

Temperature control

The temperature display shows the actual temperature of the double-drawer refrigerator. The actual temperature may vary slightly from the set temperature based on factors such as drawer opening, amount of food and room temperature.

To change the temperature setting, press the WARMER or COLDER pads until you reach the desired set temperature. After 5 seconds, the display will return to the actual temperature.

Allow 12–24 hours for the double-drawer refrigerator to reach the temperature you have set.

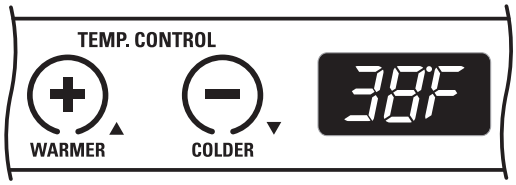

Temperature Settings

Minimum: 34°F (1.1°C)

Maximum: 45°F (7.2°C)

Child control lockout

This child control lockout feature prevents unwanted changes to your temperature settings.

After the desired temperature is set, the temperature can be locked. To lock, press both the + and – pads at the same time for five seconds. To unlock, press both + and – pads for five seconds.

Unit ON/OFF

This pad stops cooling in the double-drawer refrigerator, turns off the temperature controls and removes power to the light circuit.

Press this pad for a minimum of 3 seconds to turn the double-drawer refrigerator on or off or unplug the unit for long vacations or absences, or when cleaning the unit or changing the light bulb.

Interior fan

The interior fan located in the rear wall of the double-drawer refrigerator may run for extended periods due to usage and ambient temperature. This is normal. See *Normal operating sounds* in *Problem Solver* section for additional information about the fans. The interior fan will turn off when the drawer is opened.

Glass divider

The top drawer has a moveable, tempered glass divider for separating and organizing foods. The divider can be placed in one of two locations.

To remove the divider, lift up until divider clears the rear and front retaining slots.

To replace the divider, slide into one of the divider locations.

The glass divider is dishwasher safe, top rack only.

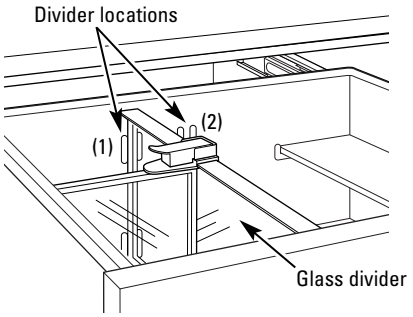

Snugger

The snugger attached to the glass divider helps prevent tipping, spilling or sliding of small items when the top drawer is opened. Lift the lock down lever near the top of the snugger then move it to fit your needs. Press the lever down to lock the snugger in place.

The snugger is dishwasher safe, top rack only.

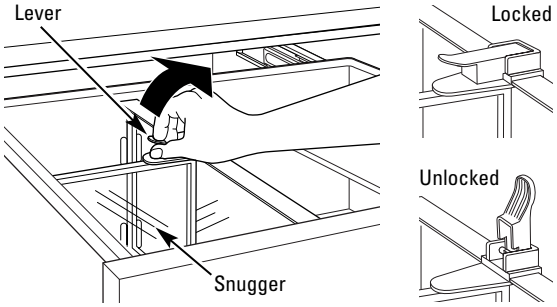

Assembly instructions

To remove:

1. Lift the glass divider assembly out of the drawer by grasping the glass divider and snugger where the lever is located. Sit the assembly on a sturdy surface.
2. Lift the lever.
3. Slide the snugger off the glass divider.
4. Remove the lever from the snugger by lifting the lever up and sliding it down and out of the assembly.

NOTE: The glass divider, snugger and lever can be cleaned on the top rack of a dishwasher.

To replace or relocate:

1. Reassemble lever into snugger by sliding the lever up into place.
2. Slide glass divider into the snugger. The lever must be installed before sliding the divider into the snugger.
3. Put the glass divider assembly in the desired divider location in the top drawer.

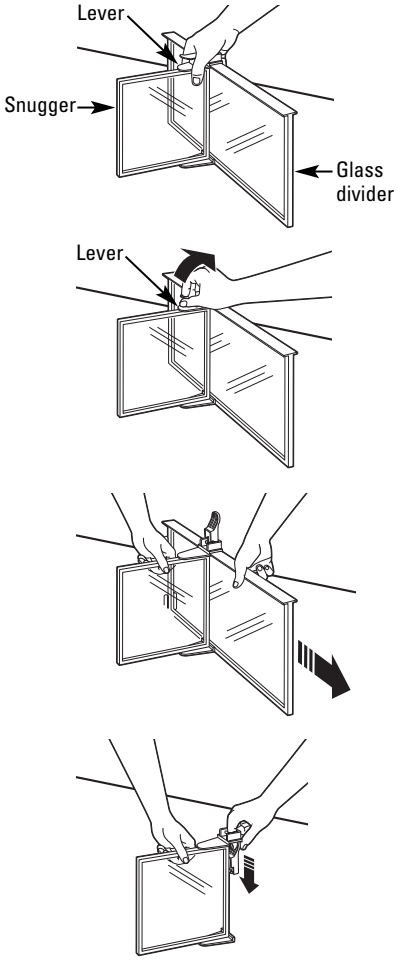

Shelf

The top drawer features a shelf that can fold down for storage of smaller containers, or fold up for storage of larger items on the drawer bottom.

To fold up the shelf, lift to the right until it rests in place against the right side.

The shelf is dishwasher safe, top rack only.

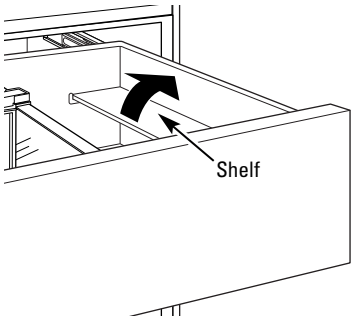

Food storage pan

The bottom drawer offers a pan for storage of smaller items. The pan slides easily to allow storage of and access to larger items in the drawer below.

The pan can be removed allowing you to carry food to the countertop for preparation or to allow storage space for large food items.

The food storage pan is dishwasher safe, top rack only.

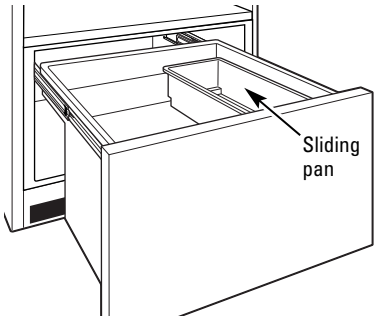

Drawer lights

The brilliant full-width LED lighting in either drawer illuminates when the drawer is opened.

For your safety

Turn the double-drawer refrigerator OFF or unplug the unit before cleaning. Turn the double-drawer refrigerator OFF by pressing the button on the control panel a minimum of 3 seconds until the light turns off.

Drawer gasket

The vinyl gasket may be cleaned with mild soap and water, or a baking soda solution. Rinse well.

In the event of a power failure

If the power fails, open the drawer as infrequently as possible to maintain the temperature.

Do not store or use gasoline or other flammable vapors and liquids in the vicinity of this or any other appliance.

Preparing for vacation

For long vacations or absences, remove food and turn the double-drawer refrigerator OFF. Clean the interior (see *Cleaning the Inside* section)

For shorter vacations, remove perishable foods and leave controls at regular settings. However, if the room temperature is expected to drop below 55°F (13°C), follow the same instructions as for long vacations.

Preparing to move

Secure all loose items such as the shelf, divider and snugger by taping them securely in place to prevent damage.

IMPORTANT: Be sure the double-drawer refrigerator stays in an upright position during moving.

For your safety

Turn the double-drawer refrigerator OFF or unplug the unit before cleaning. Turn the double-drawer refrigerator OFF by pressing the button on the control panel a minimum of 3 seconds until the light turns off.

Cleaning the outside

Drawer handles and trim—Clean with a cloth dampened with soapy water. Dry with a soft cloth.

Keep the outside clean. Wipe with a clean cloth lightly dampened with mild liquid dish detergent. Dry with a clean, soft cloth.

Do not wipe the refrigerator with a soiled dish cloth or wet towel. These may leave a residue that can damage the finish. Do not use scouring pads, powdered cleaners, bleach or cleaners containing bleach because these products can scratch and damage the finish.

Stainless Steel—Regularly clean and polish the stainless steel exterior and handle with a commercially available stainless steel cleaner such as Stainless Steel Magic™ to preserve and protect the fine finish. Stainless Steel magic is available through GE Parts and Accessories, 800.626.2002 or ge.com. Order part number WX10X15.

To avoid scratching the fine finish of the stainless steel, wipe in the same direction as the grain when polishing or cleaning any stainless steel surface. The grain on the double-drawer refrigerator runs top to bottom.

Do not use appliance wax or polish on the stainless steel.

Cleaning the inside

Unplug the double-drawer refrigerator before cleaning. If this is not practical, turn the unit OFF and wring excess moisture out of the cloth or sponge when cleaning around switches, lights or controls.

Use warm water and baking soda solution—about a tablespoon (15 ml) of baking soda to a quart (1 liter) of water. This both cleans and neutralizes odors. Thoroughly rinse and wipe dry.

Other parts of the double-drawer refrigerator—including the drawer gaskets, divider, snugger, shelf and sliding pan—can be cleaned the same way.

The glass divider, snugger, lever, shelf and food storage pan are dishwasher safe, top rack only.

Avoid cleaning cold glass divider and snugger with hot water because the extreme temperature difference may cause them to break. Handle glass shelves carefully. Rough handling of tempered glass can cause it to shatter.

Installation dimensions

stainless steel (ZIDS240 model)

The double-drawer refrigerator is designed to be built-in only. It cannot be used free-standing. The double-drawer refrigerator can be built in using the cut-out dimensions below.

When building in the double-drawer refrigerator, be sure to allow for full drawer openings so you have full access to the pull-out full extension drawers.

See the Installation Instructions (Pub. No. 31-51545) for complete directions.

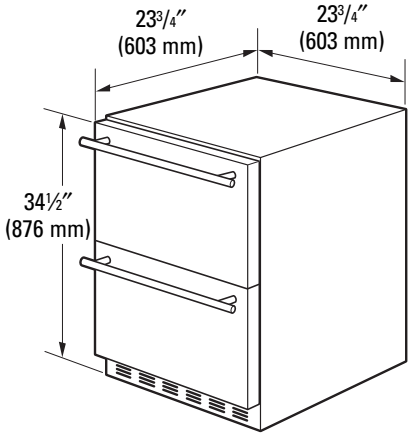

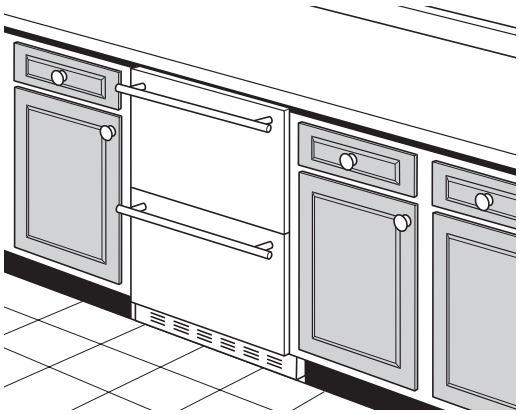

Product dimensions:

Height: 34 1/2″ (876 mm)
Width: 23 3/4″ (603 mm)
Depth: 23 3/4″ (603 mm)

NOTE:

Handle and handle standoff depth is 2 1/8″

Cut-out dimensions:

Height: 34 1/2″ (876 mm) minimum
Width: 23 3/4″ (603 mm) minimum
Depth: 24″ (610 mm)

Installation dimensions

custom panel (ZIDI240 model)

The double-drawer refrigerator is designed to be built-in only. It cannot be used free-standing. The double-drawer refrigerator can be built in using the cut-out dimensions below.

When building in the double-drawer refrigerator, be sure to allow for full drawer openings so you have full access to the pull-out full extension drawers.

See the Installation Instructions (Pub. No. 31-51545) for complete directions.

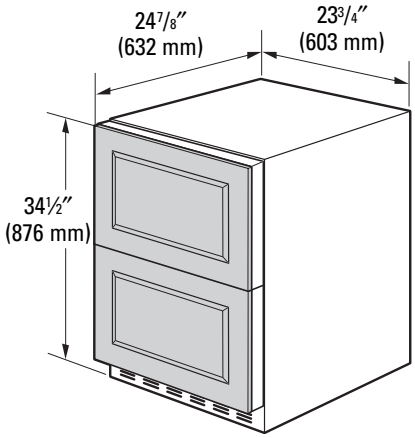

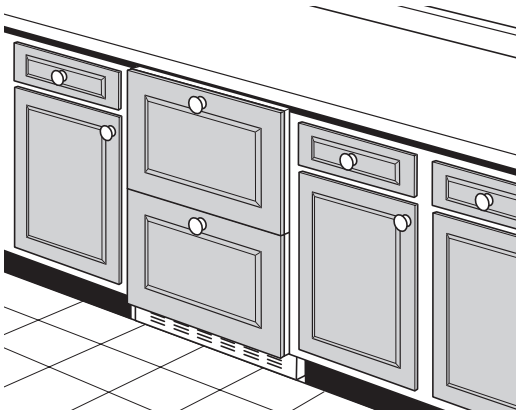

Product dimensions:

Height: 34 1/2″ (876 mm)
Width: 23 3/4″ (603 mm)
Depth: 24 7/8″ (632 mm)

NOTE:

Handles not supplied

Cut-out dimensions:

Height: 34 1/2″ (876 mm) minimum
Width: 23 3/4″ (603 mm) minimum
Depth: 24″ (610 mm)

Product clearances

On stainless steel model ZIDS240, allow 22″ min. clearance from the front of the double-drawer for drawer opening.

On custom panel model ZIDI240, allow 23⅛″ min. clearance from the front of the double-drawer for drawer opening.

When installed into a corner, allow 2½″ min. clearance between double-drawer and adjacent cabinet, wall or other appliances.

NOTE: Clearances are based on the recommended 2⅛″ handle standoff depth. Custom handle clearances may vary depending on the standoff of the custom handles.

When installed in a corner:

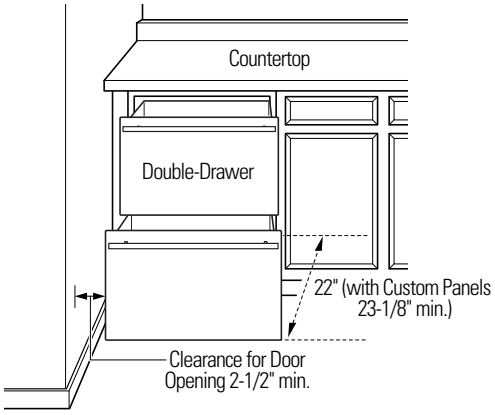

Black or Stainless Steel Toekick Options

Your custom panel (ZIDI240 model only) double-drawer refrigerator is shipped with two toekicks, a stainless steel and a black toekick. For shipping purposes, one of the toekicks will be secured to the back or inside of the unit, and the second will be installed on the unit. Keep the unused toekick and other unused or removed parts for possible future use.

Installing custom 3/4″ drawer panels and handles

(ZIDI240 model only)

3/4″ Overlay Panel Dimensions

Model ZIDI240 requires field-installed overlay drawer panels.

- The overlay panels must be secured to 1/4″ thick backer panels that slide into the trim. A 0.10″ thick spacer panel must be placed between the overlay and backer panels.
- Custom handles of your choice, supplied by your cabinet maker, must be installed on these overlay panels. Countersink all screws into the backer panels. Screws cannot protrude from the backer panels.

NOTE: Maximum total weight for custom drawer panels are 25 lbs. (12½ lbs. max. each drawer).

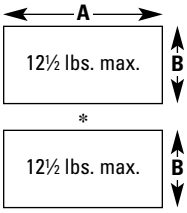

3/4″ Overlay Panel Dimensions (in inches)	A (Width)	B (Height)
1/4″ Backer	23 3/16″	14 11/16″
0.10″ Spacer	22½″	14 3/16″
3/4″ Overlay	23⅝″	15 1/16″

*Maintain a 1/4″ min. gap between top and bottom drawer panels.

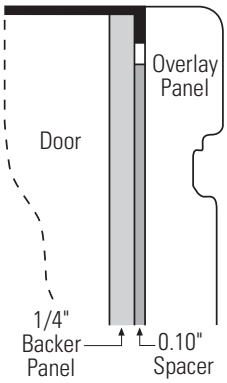

Assemble overlay panels with glue and screws

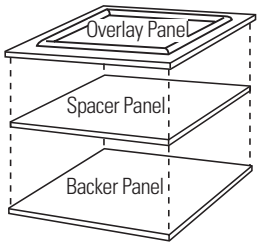

1. Center spacer panel on the backer panel, left to right and top to bottom. Secure the panels with glue.
2. Center the spacer/backer panel on the overlay panel. Secure with glue and screws. Countersink all screws into the backer panel.

Installing custom 3/4″ drawer panels and handles (cont.)

(ZIDI240 model only)

Install custom drawer panels and handles

1. Open drawers.

2. Remove 2 screws holding trim; lift trims off. Retain screws.

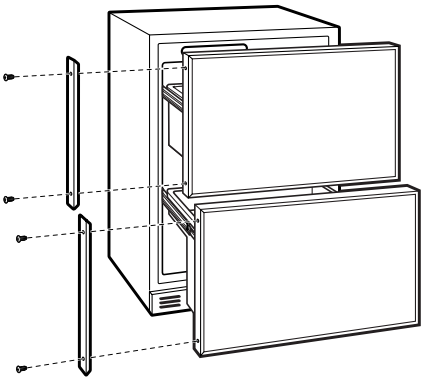

3. Custom handles of your choice, supplied by your cabinet maker, must be installed onto the overlay panels before they are slid into the trims. Countersink all screws into the backer panels. Screws cannot protrude from the backer panels.

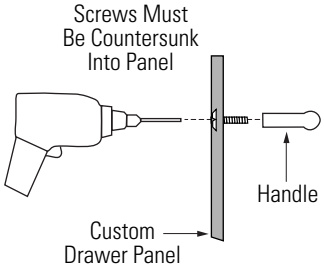

4. Slide overlay panels into the trims.

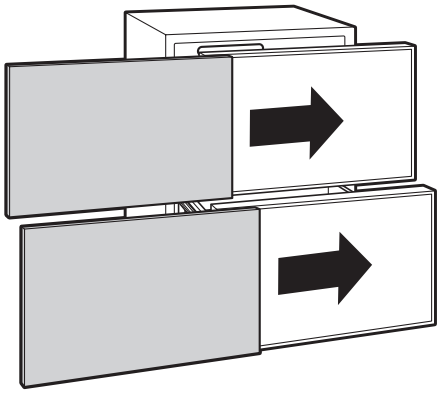

5. Reinstall the side trims using the trim screws removed earlier.

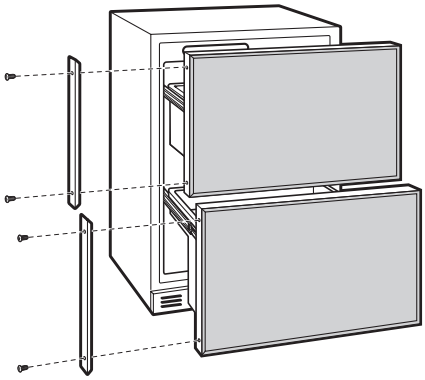

6. Place the brushed decorative covers over the side trim to hide the screw heads. Ensure side trim is aligned top-to-bottom and front-to-back. Snap into place.

NOTE: For shipping purposes, the brushed decorative cover will be secured to the front of the unit.

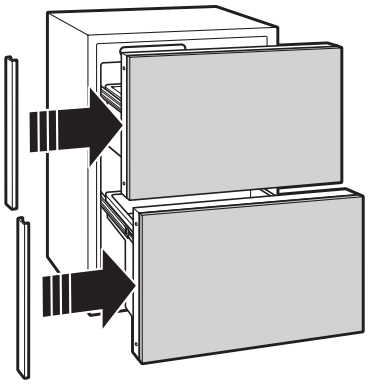

Normal operating sounds

Newer appliances sound different from older appliances. Modern appliances have more features and use newer technology.

Do you hear what I hear? These sounds are normal.

HUMMM... WHOOSH...

- The new high efficiency compressor may run faster and longer than your old appliance and you may hear a high-pitched hum or pulsating sound while it is operating.
- Sometimes the appliance runs for an extended period, especially when the drawers are opened frequently.
- You may hear a whooshing sound when the drawers close. This is due to pressure equalizing within the appliance.
- The cabinet fan runs continuously except when the drawer is opened.

WHIR!

- You may hear the fans spinning at high speeds. This happens when the appliance is first plugged in, when the drawer is opened frequently or when a large amount of food is added to the appliance. The fans help maintain desired temperatures.
- If the drawer is open for over 3 minutes, you may hear the fans come on in order to cool the light bulbs.
- The fans change speeds in order to provide optimal cooling and energy savings.

CLICKS, POPS, CRACKS and CHIRPS

- You may hear cracking or popping sounds when the appliance is first plugged in. This happens as the appliance cools to the correct temperature.
- Electronic dampers click open and closed to provide optimal cooling and energy savings.
- The electronic control board may cause a clicking sound when relays activate to control appliance components.
- Expansion and contraction of cooling coils during and after defrost can cause a cracking or popping sound.

WATER SOUNDS

- The flow of refrigerant through the freezer cooling coils may make a gurgling noise like boiling water.
- Water dropping on the defrost heater can cause a sizzling, popping or buzzing sound during the defrost cycle.
- A water dripping noise may occur during the defrost cycle as ice melts from the evaporator and flows into the drain pan.
- Closing the drawer may cause a gurgling sound due to pressure equalization.

Questions? Use this problem solver!

PROBLEM	POSSIBLE CAUSE
APPLIANCE DOES NOT OPERATE	• Appliance is so quiet that most of the time you will hear low or no operating noise. • Appliance may be in defrost cycle when compressor motor does not operate for about 30 minutes. • Controls are set to OFF. Press ON/OFF button on control panel for a minimum of 3 seconds. • If interior light is not on, appliance may not be plugged in at wall outlet. Push the plug completely into the wall outlet. • The fuse is blown/circuit breaker is tripped. Replace fuse or reset the breaker. • The appliance is in showroom mode. Unplug it and plug it back in.
VIBRATION OR RATTLING (Slight vibration is normal.)	• Adjust the leveling legs as shown in the Installation Instructions.
COMPRESSOR MOTOR OPERATES FOR LONG PERIODS OR CYCLES ON AND OFF FREQUENTLY	• Normal when appliance is first plugged in. Wait 24 hours for the appliance to completely cool down. • Often occurs when large amounts of food are placed in appliance. This is normal. • Drawer left open or package holding drawer open. • Hot weather or frequent drawer openings. This is normal. • Temperature control set at the coldest setting. See Temperature Control.
FRESH FOOD OR FREEZER COMPARTMENT TOO WARM	• Temperature control not set cold enough. See Temperature Control. • Warm weather or frequent drawer openings. • Drawer left open for long time. • Package may be holding drawer open.
FROST OR ICE CRYSTALS ON REAR WALL	• Too frequent or too long drawer openings.

Questions? Use this problem solver!

PROBLEM	POSSIBLE CAUSE
APPLIANCE HAS ODOR	• Interior needs cleaning. See Care and Cleaning. • Keep open box of baking soda in appliance; replace every 3 months.
DRAWER NOT CLOSING PROPERLY	• Drawer gasket is sticking or folding over. Apply petroleum jelly or paraffin wax to the face of the gasket. • The drawer is hitting an internal component inside the appliance. Adjust interior components to prevent interference.
MOISTURE FORMS ON OUTSIDE OF APPLIANCE	• Not unusual during periods of high humidity. Wipe surface dry. • Drawer left open or package holding drawer open.
MOISTURE COLLECTS INSIDE	• Too frequent or too long drawer openings. • In humid weather, air carries moisture into appliance when drawers are opened.
INTERIOR LIGHT DOES NOT WORK	• No power at outlet. • Light needs replacing. Call GE Consumer Service at 1.800.444.1845 for light replacement.
HOT AIR FROM BOTTOM OF APPLIANCE	• Normal air flow cooling motor. In the refrigeration process, it is normal that heat be expelled in the area under the appliance. Some floor coverings are sensitive and will discolor at these safe and normal temperatures.
APPLIANCE NEVER SHUTS OFF BUT TEMPERATURES ARE OK	• Adaptive defrost keeps compressor running during drawer openings. This is normal. The appliance will cycle off after the drawer remains closed for 2 hours. • Normal operation in extreme temperatures.
ACTUAL TEMPERATURE NOT EQUAL TO SET TEMPERATURE	• Unit just plugged in. Allow 24 hours for the system to stabilize. • Drawer open for too long. Allow 24 hours for the system to stabilize. • Warm contents added to appliance. Allow 24 hours for the system to stabilize. • Defrost cycle is in process. Allow 24 hours for the system to stabilize.
TEMPERATURE WILL NOT ADJUST	• Temperature may be in lockout mode. Press both + and – pads for 5 seconds to unlock the temperature.

With the purchase of your new Monogram appliance, receive the assurance that if you ever need information or assistance from GE, we will be there. All you have to do is call—toll-free!

GE Answer Center®

In the USA: 800.626.2000

Whatever your question about any Monogram major appliance, GE Answer Center® information service is available to help. Your call—and your question—will be answered promptly and courteously. And you can call any time. GE Answer Center® service is open 24 hours a day, 7 days a week.

OR

Visit our Website at: **ge.com**

In Canada, call 1.888.880.3030.

In-Home Repair Service

In the USA: 800.444.1845

In Canada: 1.888.880.3030

A GE consumer service professional will provide expert repair service, scheduled at a time that's convenient for you. Many GE Consumer Service company-operated locations offer you service today or tomorrow, or at your convenience (7:00 a.m. to 7:00 p.m. weekdays, 9:00 a.m. to 2:00 p.m. Saturdays). Our factory-trained technicians know your appliance inside and out—so most repairs can be handled in just one visit.

For Customers With Special Needs…

In the USA: 800.626.2000

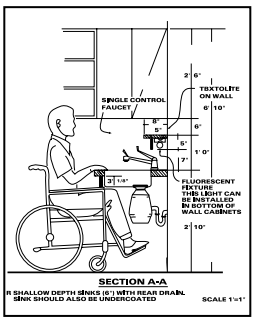

GE offers Braille controls for a variety of GE appliances, and a brochure to assist in planning a barrier-free kitchen for persons with limited mobility.

Consumers with impaired hearing or speech who have access to a TDD or a conventional teletypewriter may call 800.TDD.GEAC (800.833.4322) to request information or service.

Service Contracts

In the USA: 800.626.2224

In Canada: 1.888.880.3030

You can have the secure feeling that GE Consumer Service will still be there after your warranty expires. Purchase a GE contract while your warranty is still in effect and you'll receive a substantial discount. With a multiple-year contract, you're assured of future service at today's prices.

Parts and Accessories

In the USA: 800.626.2002

In Canada: 1.888.880.3030

Individuals qualified to service their own appliances can have parts or accessories sent directly to their home. The GE parts system provides access to over 47,000 parts…and all GE Genuine Renewal Parts are fully warranted. VISA, MasterCard and Discover cards are accepted.

User maintenance instructions contained in this manual cover procedures intended to be performed by any user. Other servicing generally should be referred to qualified service personnel. Caution must be exercised, since improper servicing may cause unsafe operation.

YOUR MONOGRAM DOUBLE-DRAWER REFRIGERATOR WARRANTY

Staple sales slip or canceled check here. Proof of original purchase date is needed to obtain service under warranty.

WHAT IS COVERED

From the Date of the Original Purchase

LIMITED ONE-YEAR WARRANTY
For one year from date of original purchase, we will provide, free of charge, parts and service labor in your home to repair or replace *any part of the unit* that fails because of a manufacturing defect.

LIMITED FIVE-YEAR WARRANTY
For five years from date of original purchase, we will provide, free of charge, parts and service labor in your home to repair or replace *any part of the sealed refrigerating system* (the compressor, condenser, evaporator and all connecting tubing) that fails because of a manufacturing defect.

This warranty is extended to the original purchaser and any succeeding owner for products purchased for ordinary home use in the 48 mainland states, Hawaii, Washington, D.C. or Canada. If the product is located in an area where service by a GE Authorized Servicer is not available, you may be responsible for a trip charge or you may be required to bring the product to an Authorized GE Service location for service. In Alaska the warranty is the same except that it is LIMITED because you must pay to ship the product to the service shop or for the service technician's travel costs to your home.

All warranty service will be provided by our Factory Service Centers or by our authorized Customer Care® servicers during normal working hours.

Should your appliance need service, during warranty period or beyond, in the USA call 800.444.1845. In Canada: 888.880.3030. Please have your serial number and model number available when calling for service.

WHAT IS NOT COVERED

- **Service trips to your home to teach you how to use the product.**
- **Replacement of house fuses or resetting of circuit breakers.**
- **Damage to the product caused by accident, fire, floods or acts of God.**
- **Failure of the product if it is used for other than its intended purpose or used commercially.**
- **Damage caused after delivery.**
- **Improper installation, delivery or maintenance. If you have an installation problem, contact your dealer or installer. You are responsible for providing adequate electrical, plumbing and other connecting facilities.**
- **Replacement of the light bulbs, if included.**
- **Loss of food due to spoilage (in the USA only).**
- **Incidental or consequential damage caused by possible defects with this appliance.**
- **Product not accessible to provide required service.**

EXCLUSION OF IMPLIED WARRANTIES—Your sole and exclusive remedy is product repair as provided in this Limited Warranty. Any implied warranties, including the implied warranties of merchantability or fitness for a particular purpose, are limited to one year or the shortest period allowed by law.

Some states/provinces do not allow the exclusion or limitation of incidental or consequential damages, so the above limitation or exclusion may not apply to you. This warranty gives you specific legal rights, and you may also have other rights which vary from state to state/province to province. To know what your legal rights are in your state/province, consult your local or state/provincial consumer affairs office or your state's Attorney General.

Warrantor in USA: General Electric Company,
Louisville, KY 40225

Warrantor in Canada: Camco Inc.

197D5891P012
49-60434
11-05 JR
Printed in Slovenia

GE Consumer & Industrial
Appliances
General Electric Company
Louisville, KY 40225
ge.com